HELI

CPD 20/25/30/35/38

A7LIH2/A16LIH2



HELI



SUPERIOR PERFORMANCE

The battery, motor and electronic control system are efficiently matched to fully leverage the high performance of the product

The high-power pump motor configuration enables the mast to rise and fall quickly, resulting in higher operational efficiency

The high-power drive motor is matched with a high-speed-ratio reducer, which enables a faster running speed and easier passage on slopes

The long-wheelbase body design lowers the center of gravity and provides better load-bearing stability

SAFE AND RELIABLE

Full set of OPS, unmanned self-locking, intelligent protection

Parking safety reminder

It adopts an internal combustion vehicle reinforced mast, reinforced drive axle and cast steering axle, ensuring reliable and guaranteed quality

COMFORTABLE OPERATION

The lower buffer of the mast cylinder reduces the impact and makes the operation more comfortable

Wide-view mast and flat top guard frame provide a broader operating field of vision

Semi-enclosed seats reduce fatigue and ensure safe and comfortable driving

CONVENIENT MAINTENANCE AND REPAIR

The hood has a large opening Angle, which is convenient for the maintenance of major components

The inspection ports for batteries, motors and electronic control systems are centralized, making maintenance convenient

The charging port is external, making daily charging and discharging more convenient

Lithium batteries are available in multiple capacities and have a long battery life

New H2 series upgrade 2-3.8 t Lithium battery balanced forklift



Standard instrument panel



Standard color screen instrument panel



Standard USB and teacup holder



Buffer under the mast cylinder

The electrical system has high insulation, high heat resistance, low voltage, and high energy density lithium battery, which meets the requirements of E, S and P environments. The electrical system is deeply optimized with multiple safety functions such as short circuit, overheat, low battery lock and sequential protection. It features a full set of OPS intelligent safety protection and three modes: P, E and S, to meet the different driving habits of users.

The hydraulic system features a 24° conical seal, which is safe and reliable. The mast is equipped with hydraulic burst pipe protection and forward tilt self-locking protection functions.

The transmission system is empowered by a high speed ratio, providing strong power, smooth transmission and low noise.

Wide-view door frame, providing a broader field of vision.

The top guard is equipped with a standard PC rainproof roof, effectively enhancing the working field of vision. It is equipped with a standard PC polycarbonate sheet canopy.

The external welded oil tank ensures more thorough heat dissipation of the hydraulic system.

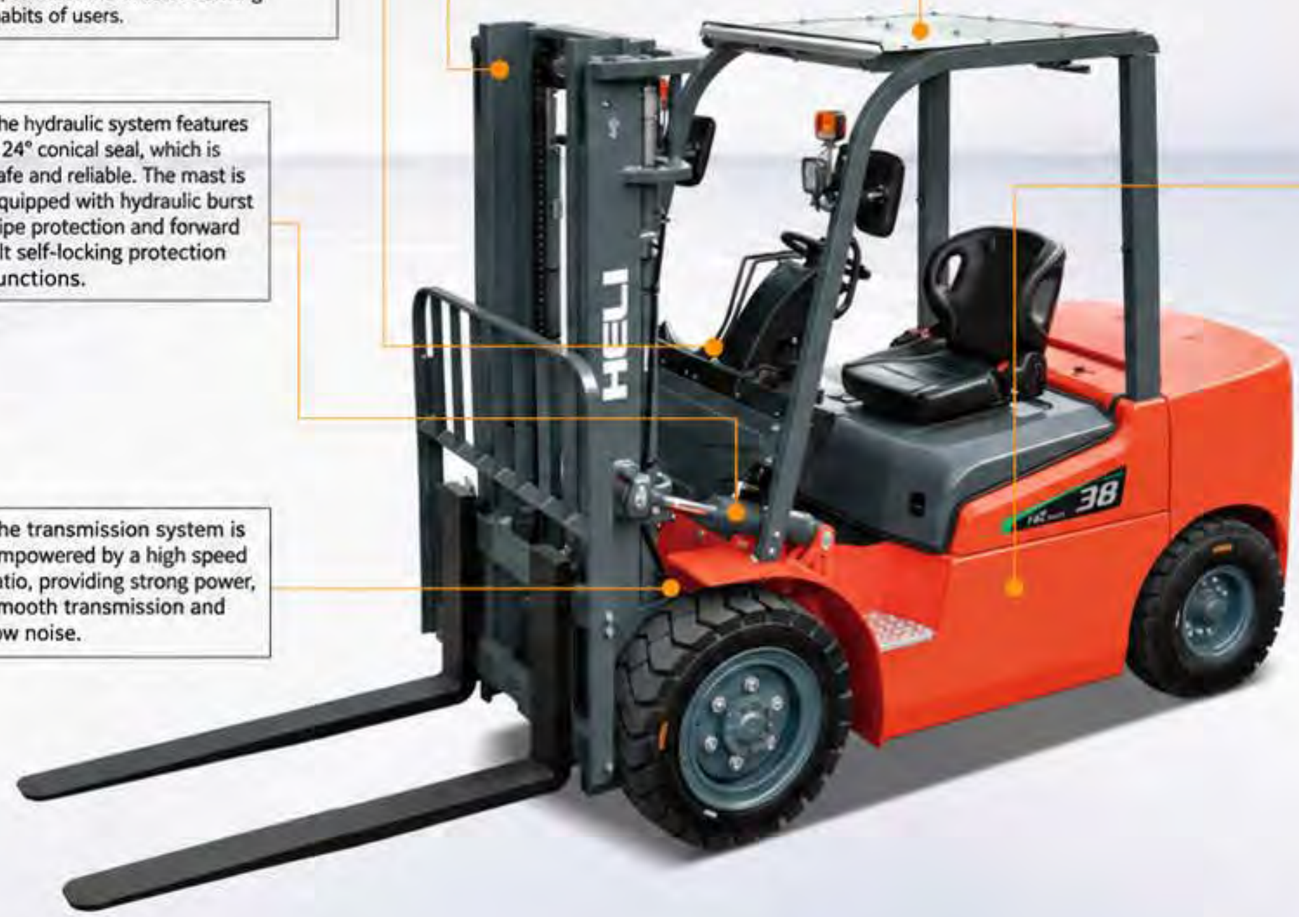



Standard semi-enclosed seats



External charging port



Integral brake drum



Casting steering bridge

Optional Configuration

Internet of vehicles	Fingerprint unlocking	AI anti-collision system	Radar image	Speed limit alarm
Special for cold storage	Anti-corrosion treatment	Turning speed limit	On-board charger	All kinds of attachments
Battery side removal	Double brake pedals	Inclined cylinder protective cover		

制造商和技术参数1 Manufacturer and Technical Data1

	特性	Characteristic				
1.01	制造商	Manufacturer			HELI	
1.02	型号	Model			CPD20	CPD25
1.03	配置号	Configuration number			A7LIH2/A16LIH2	
1.04	额定起重量	Rated lifting capacity	Q	kg	2000	2500
1.05	载荷中心距	Load center	c	mm	500	
1.06	动力方式	Power mode			锂电池 Lithium battery	
1.07	驾驶方式	Driving style			乘座式 Ride style	
	尺寸	Size				
2.01	最大起升高度	Maximum lifting height	H	mm	3000	
2.02	门架全高（货叉落地，门架垂直）	Full height of the gantry (fork landing, gantry vertical)	H1	mm	2000	
2.03	货叉最大提升高度（带挡货架）	Full height of the mast (forks landing, mast vertical)	H2	mm	4039	
2.04	自由起升高度	Free lift height	H3	mm	156	
2.05	全高（护顶架）	Full height (roof support)	H4	mm	2120	
2.06	最小离地间隙（满载，门架处）	Minimum ground clearance (at the mast/at the frame)	H5	mm	115	
2.07	座椅面至护顶架距离	Distance from seat surface to roof frame	H6	mm	1035	
2.08	牵引销高度	Height of traction pin	H9	mm	290	
2.09	挡货架高度（门架货叉面算起）	Shelf height (calculated from the fork surface of the mast)	H13	mm	1000	
2.10	全长（带货叉）	Full length (with fork)	L	mm	3450	3535
2.11	全长（不带货叉）	Full length (without fork)	L'	mm	2530	2615
2.12	轴距	Wheelbase	L1	mm	1650	
2.13	前悬距	Front overhang	L2	mm	465	
2.14	后悬距	Rear overhang	L3	mm	415	500
2.15	全宽	Full width	W1	mm	1170	
2.16	前轮距	Front track width	W3	mm	970	
2.17	后轮距	Rear track width	W2	mm	970	
2.18	货叉调节范围（外侧）最大/最小	Fork adjustment range (outer) maximum/minimum	W5	mm	1030/244	
2.19	最小转弯半径（外侧）	Minimum turning radius (outside)	r	mm	2215	2270
2.20	最小转弯半径（内侧）	Minimum turning radius (inside)	r'	mm	80	
2.21	最小直角通道宽度	Minimum right angle channel width	Ra	mm	2510	
2.22	最小直角堆垛通道宽度，托盘1000X1200(宽)	Right angle stacking aisle width for pallet 1000 x1200mm	Ast	mm	3880	3935
2.23	最小直角堆垛通道宽度，托盘1200X800(宽)	Right angle stacking aisle width for pallet 1200 x 800mm	Ast	mm	4080	4135
2.24	门架倾角，前/后	Mast inclination, front/rear	α/β	°	6/12	
2.25	货叉尺寸 厚×宽×长	Fork size, thickness/width/length	T×W×L4	mm	40×122×920	40×122×1070
	性能	Performance				
3.01	最大行驶速度，满/空载	Maximum driving speed, fully loaded/unloaded		km/h	18/19	
3.02	起升速度，满/空载	Lifting speed, fully loaded/unloaded		mm/s	360/560	
3.03	下降速度，满/空载	Descending speed, fully loaded/unloaded		mm/s	450/500	
3.04	最大牵引力，满/空载	Maximum traction force, fully loaded/unloaded		KN	16/13	
3.05	最大爬坡能力，满/空载	Gradeability, fully loaded/unloaded		%	18/20	
	重量	Weight				
4.01	总重（空载/满载）	Total weight (unloaded/fully loaded)		kg	3230/5230	3545/6045
4.02	桥负荷：满载，前/后	Bridge load, fully loaded, front/rear		kg	4680/550	5410/635
4.03	桥负荷：空载，前/后	Bridge load, unloaded, front/rear		kg	1530/1700	1680/1865
	车轮和轮胎	Wheels and tires				
5.01	轮胎类型	Tire type			充气胎 Pneumatic tire	
2.02	车轮数量（前/后）	Number of wheels(front/rear)			2/2	
2.03	轮胎，前	Tire,front			7.00-12-12PR	
2.04	轮胎，后	Tire,rear			6.00-9-10PR	
	电池	Battery				
6.01	蓄电池电压/容量	Battery voltage/capacity		V/Ah	80/202	
6.02	蓄电池重量	Battery weight		kg	245	
	电机和控制器	Motors and controllers				
7.01	驱动电机功率（S2-60min）	Drive motor power(S2-60min)		kW	15（A7LIH2)/18(A16LIH2)	
7.02	起升电机功率（S3-15%）	Lifting motor power(S3-15min)		kW	18（A7LIH2)/22.6(A16LIH2)	
7.03	驱动电机控制方式	Control mode of drive motor			MOSFET/AC	
7.04	起升电机控制方式	Control mode of lifting motor			MOSFET/AC	
7.05	控制器型号	Controller model			松正电控 Songzheng electric control（A7LIH2）	
					海天电控Haitian electric control(A16LIH2)	
	其它	Other				
8.01	行车制动/停车制动	Service brake/Parking brake			液力/机械 Hydraulic / Machinery	
8.02	液压系统工作压力	Hydraulic system working pressure		Mpa	17.5	

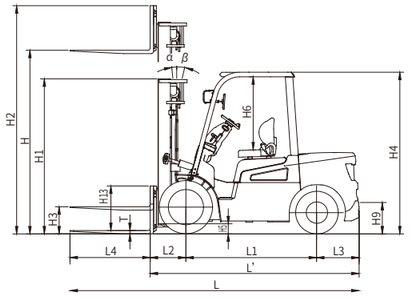

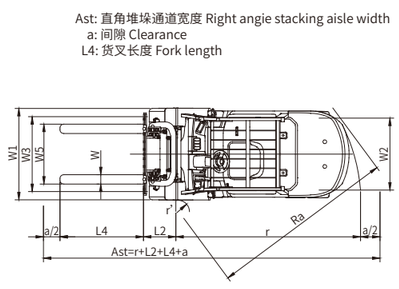

制造商和技术参数2 Manufacturer and Technical Data2

	特性	Characteristic					
1.01	制造商	Manufacturer			HELI		
1.02	型号	Model			CPD30	CPD35	CPD38
1.03	配置号	Configuration number			A7LIH2/A16LIH2		
1.04	额定起重量	Rated lifting capacity	Q	kg	3000	3500	3800
1.05	载荷中心距	Load center	c	mm	500		
1.06	动力方式	Power mode			锂电池 Lithium battery		
1.07	驾驶方式	Driving style			乘座式 Ride style		
	尺寸	Size					
2.01	最大起升高度	Maximum lifting height	H	mm	3000		
2.02	门架全高（货叉落地，门架垂直）	Full height of the gantry (fork landing, gantry vertical)	H1	mm	2070	2120	2180
2.03	货叉最大提升高度（带挡货架）	Full height of the mast (forks landing, mast vertical)	H2	mm	4217		
2.04	自由起升高度	Free lift height	H3	mm	155	160	
2.05	全高（护顶架）	Full height (roof support)	H4	mm	2140		
2.06	最小离地间隙（满载，门架处）	Minimum ground clearance (at the mast/at the frame)	H5	mm	135		
2.07	座椅面至护顶架距离	Distance from seat surface to roof frame	H6	mm	1035		
2.08	牵引销高度	Height of traction pin	H9	mm	310		283
2.09	挡货架高度（门架货叉面算起）	Shelf height (calculated from the fork surface of the mast)	H13	mm	1182	1177	1177
2.10	全长（带货叉）	Full length (with fork)	L	mm	3862	3868	3868
2.11	全长（不带货叉）	Full length (without fork)	L'	mm	2792	2798	2798
2.12	轴距	Wheelbase	L1	mm	1750		
2.13	前悬距	Front overhang	L2	mm	478	484	484
2.14	后悬距	Rear overhang	L3	mm	564	564	564
2.15	全宽	Full width	W1	mm	1225		
2.16	前轮距	Front track width	W3	mm	1000		
2.17	后轮距	Rear track width	W2	mm	970		
2.18	货叉调节范围（外侧）最大/最小	Fork adjustment range (outer) maximum/minimum	W5	mm	1060/250		
2.19	最小转弯半径（外侧）	Minimum turning radius (outside)	r	mm	2400		2410
2.20	最小转弯半径（内侧）	Minimum turning radius (inside)	r'	mm	80		
2.21	最小直角通道宽度	Minimum right angle channel width	Ra	mm	2510		
2.22	最小直角堆垛通道宽度，托盘1000X1200(宽)	Right angle stacking aisle width for pallet 1000 x1200mm	Ast	mm	4078	4084	4094
2.23	最小直角堆垛通道宽度，托盘1200X800(宽)	Right angle stacking aisle width for pallet 1200 x 800mm	Ast	mm	4278	4284	4294
2.24	门架倾角，前/后	Mast inclination, front/rear	α/β	°	6/12		
2.25	货叉尺寸 厚×宽×长	Fork size, thickness/width/length	T×W×L4	mm	45×125×1070	50×125×1070	
	性能	Performance					
3.01	最大行驶速度，满/空载	Maximum driving speed, fully loaded/unloaded		km/h	18/19		
3.02	起升速度，满/空载	Lifting speed, fully loaded/unloaded		mm/s	290/410		270/410
3.03	下降速度，满/空载	Descending speed, fully loaded/unloaded		mm/s	430/400		
3.04	最大牵引力，满/空载	Maximum traction force, fully loaded/unloaded		KN	19/13		
3.05	最大爬坡能力，满/空载	Gradeability, fully loaded/unloaded		%	18/20		
	重量	Weight					
4.01	总重（空载/满载）	Total weight (unloaded/fully loaded)		kg	4115/7115	4435/7935	4670/8470
4.02	桥负荷：满载，前/后	Bridge load, fully loaded, front/rear		kg	6300/815	7110/825	7620/850
4.03	桥负荷：空载，前/后	Bridge load, unloaded, front/rear		kg	1635/2480	1655/2780	1660/3010
	车轮和轮胎	Wheels and tires					
5.01	轮胎类型	Tire type			充气胎 Pneumatic tire		
2.02	车轮数量（前/后）	Number of wheels(front/rear)			2/2		
2.03	轮胎，前	Tire,front			28×9-15-14PR		
2.04	轮胎，后	Tire,rear			6.5-10-10PR		
	电池	Battery					
6.01	蓄电池电压/容量	Battery voltage/capacity		V/Ah	80/230		
6.02	蓄电池重量	Battery weight		kg	245		
	电机和控制器	Motors and controllers					
7.01	驱动电机功率（S2-60min）	Drive motor power(S2-60min)		kW	18（A7LIH2)/18(A16LIH2)		
7.02	起升电机功率（S3-15%）	Lifting motor power(S3-15min)		kW	22（A7LIH2)/22.6(A16LIH2)		
7.03	驱动电机控制方式	Control mode of drive motor			MOSFET/AC		
7.04	起升电机控制方式	Control mode of lifting motor			MOSFET/AC		
7.05	控制器型号	Controller model			松正电控 Songzheng electric control（A7LIH2）		
					海天电控Haitian electric control(A16LIH2)		
	其它	Other					
8.01	行车制动/停车制动	Service brake/Parking brake			液力/机械 Hydraulic / Machinery		
8.02	液压系统工作压力	Hydraulic system working pressure		Mpa	17.5	19.5	

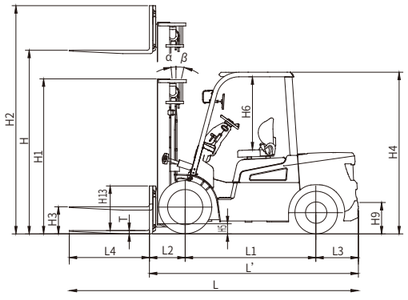

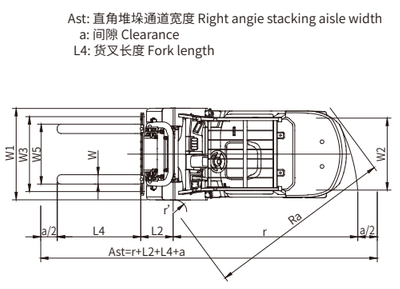

锂电池、充电机配置 Lithium battery and charger configuration

车型 Vehick	电池配置 Battery configuration	电池电压 Battery voltage (V)	和鼎锂电池 Hedong lithium battery	益佳通锂电池 Yichatong lithium battery	鹏成锂电池 Pengcheng lithium battery		充电机型号 Charger moder
					亿纬电芯 Eve cell	宁德时代电芯 CATL cell	
CPD20/25-A7LIH2/A16LIH2	标配 Standard	80	202	205	206	200	D80V100ALi-438
	选配 Optional	80	150	150	150	160	D80V200ALi-428
			173	175	173	173	
			230	230	230	228	
			250	260	250	250	
			280	280	280	268	
			300	300	304	302	
			346	350	346	346	
			404	410	412	400	
			460	460	460	456	
			560	560	560	536	
			608	600	608	604	

车型 Vehick	电池配置 Battery configuration	电池电压 Battery voltage (V)	和鼎锂电池 Hedong lithium battery	益佳通锂电池 Yichatong lithium battery	鹏成锂电池 Pengcheng lithium battery		充电机型号 Charger moder
					亿纬电芯 Eve cell	宁德时代电芯 CATL cell	
CPD30/35/38-A7LIH2/A16LIH2	标配 Standard	80	230	230	230	228	D80V100ALi-438
	选配 Optional	80	150	150	150	160	D80V200ALi-428
			173	175	173	173	
			202	205	206	200	
			250	260	250	250	
			280	280	280	268	
			300	300	304	302	
			346	350	346	346	
			404	410	412	400	
			460	460	460	456	
			560	560	560	536	
			608	600	608	604	

注：1、锂电池容量选择低于标配容量时，整车部分性能可能会下降；
2、电池容量选配请咨询销售或技术支持；
3、合力专用充电机具有预约定时充电功能，可实现峰谷充电，电费更节省。

Note: 1、When the capacity of lithium battery is selected to be lower than the standard capacity, some performance of the whole vehicle may decrease;
2、Please consult sales or technical support for battery capacity selection.
3、The HELI dedicated charger has a scheduled charging function ,which can achieve peak and valley charging and save more electricity costs.

载荷曲线图 Load curve

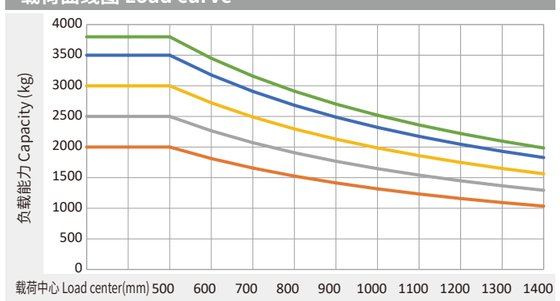

2t 2.5t 3t 3.5t 3.8t

注：
竖轴表示承载量，横轴表示载荷中心。载荷中心是从货叉正面计算起，标准载荷的基点是指负荷边长为1000毫米的立方体中心位置。当门架前倾、使用非标准货叉或装载超过正常宽度的负荷时，将会使承载量减少。通过负荷曲线图，能及时地了解标准门架在各种载荷中心时的承载能力。

Note:The vertical axis stands for load capacity and the horizontal axis stands for load center which is calculated from the front of the fork. The base point of the standard load refers to the center position of the cube with 1000mm length of side. When mast is tilted forward, nonstandard fork usage or load with over wide goods, load capacity will be reduced. Different load capacity in different load center can be known in time through load chart.

2-2.5t 门架参数表 Mast configuration table

门架类型 Gantry type	门架型号 Mast model	最大起升高度 (mm) Maximum lifting height (mm)	承载能力 (载荷中心为500mm)(kg) Load-bearing capacity (load center 500mm) (kg)		自由起升高度(mm) Free lifting height (mm)		门架全高(mm) Total height of the mast (mm)			整车自重(kg) Vehicle self-weight (kg)		门架倾角 α/β (°) Mast inclination Angle α/β (°)
					不带挡货架 Shelves without barriers	带挡货架 Shelving with stops	门架全高 (货叉落地) The full height of the mast (The fork touches the ground)	门架全高(货叉到顶) Full height of the mast (forks reaching the top) 不带挡货架 Shelves without barriers	门架全高(货叉到顶) Full height of the mast (forks reaching the top) 带挡货架 Shelving with stops			
			2t	2.5t	2-2.5t	2-2.5t	2-2.5t	2-2.5t	2-2.5t	2t	2.5t	
二级基本型门架 Secondary basic type door frame	M200	2000	2000	2500	156	156	1500	2663	3039	3175	3490	6-12
	M250	2500	2000	2500	156	156	1750	3163	3539	3225	3530	6-12
	M300	3000	2000	2500	156	156	2000	3663	4039	3265	3580	6-12
	M330	3300	2000	2500	156	156	2150	3963	4339	3295	3600	6-12
	M350	3500	2000	2500	156	156	2250	4163	4539	3315	3620	6-12
	M370	3700	2000	2500	156	156	2350	4363	4739	3325	3640	6-12
	M400	4000	2000	2500	156	156	2550	4663	5039	3405	3720	6-12
	M425	4250	1900 *2000	2300 *2500	156	156	2675	4923	5289	3425	3740	6-6 *6-12
	M450	4500	1800 *1900	2200 *2400	156	156	2800	5163	5539	3455	3760	6-6 *6-12
	M500	5000	1650 *1750	1800 *2250	156	156	3050	5663	6039	3495	3810	6-6 *6-12
	M550	5500	1400 *1700	1500 *2000	156	156	3350	6163	6539	3595	3900	3-6 *3-6
	M600	6000	1000 *1600	1050 *1800	156	156	3600	6663	7039	3635	3950	3-6 *3-6
二级全自由门架 Second-level fully free mast	ZM200	2000	2000	2500	867	491	1500	2663	3039	3205	3510	6-12
	ZM250	2500	2000	2500	1117	741	1750	3163	3539	3255	3560	6-12
	ZM300	3000	2000	2500	1367	991	2000	3663	4039	3295	3610	6-12
	ZM330	3300	2000	2500	1517	1141	2150	3967	4343	3325	3640	6-12
	ZM350	3500	2000	2500	1617	1241	2250	4163	4539	3345	3660	6-12
	ZM370	3700	2000	2500	1717	1341	2350	4363	4739	3365	3680	6-12
	ZM400	4000	2000	2500	1917	1541	2550	4663	5039	3445	3750	6-12
	ZM425	4250	1900 *2000	2300 *2500	2042	1666	2675	4914	5290	3465	3780	6-6 *6-12
	ZM450	4500	1800 *1900	2200 *2400	2167	1791	2800	5153	5529	3495	3800	6-6 *6-12
	ZM500	5000	1650 *1750	1800 *2250	2417	2041	3050	5663	6039	3545	3850	6-6 *6-12
	ZM550	5500	1400 *1700	1500 *2000	2717	2341	3350	6163	6539	3645	3950	6-6 *6-6
	ZM600	6000	1000 *1600	1050 *1800	2967	2591	3600	6663	7039	3695	4000	6-6 *6-6
三级全自由门架 Three-level fully free mast	ZSM360	3600	2000	2500	1147	791	1800	4283	4639	3425	3730	6-6
	ZSM400	4000	2000	2500	1297	941	1950	4683	5039	3465	3770	6-6
	ZSM435	4350	1900 *1900	2300 *2400	1397	1041	2050	5033	5389	3495	3810	6-6 *6-6
	ZSM450	4500	1850 *1850	2300 *2400	1447	1091	2100	5183	5539	3505	3820	6-6 *6-6
	ZSM470	4700	1800 *1850	2050 *2350	1512	1156	2165	5377	5733	3525	3840	6-6 *6-6
	ZSM480	4800	1800 *1800	2000 *2350	1557	1201	2210	5483	5839	3545	3850	6-6 *6-6
	ZSM500	5000	1650 *1800	1800 *2300	1647	1291	2300	5683	6039	3565	3870	6-6 *6-6
	ZSM540	5400	1450 *1700	1550 *2150	1747	1391	2400	6083	6439	3595	3910	3-6 *3-6
	ZSM600	6000	1000 *1600	1050 *1800	1947	1591	2600	6683	7039	3695	4010	3-6 *3-6
	ZSM650	6500	600 *1200	700 *1600	2147	1791	2800	7183	7539	3755	4060	3-3 *3-3
	ZSM700	7000	400 *1000	450 *1200	2322	1966	2975	7683	8039	3805	4110	3-3 *3-3

注：*表示前轮为双胎的额定载重量。

3-3.8t 门架参数表 Mast configuration table

门架类型 Gantry type	门架型号 Mast model	最大起升高度(mm) Maximum lifting height (mm)	承载能力(载荷中心为500mm)(kg) Load-bearing capacity (load center 500mm) (kg)			自由起升高度(mm) Free lifting height (mm)						门架全高(mm) Total height of the mast (mm)									整车自重(kg) Vehicle self-weight (kg)			门架倾角α/β(°) Mast inclination Angle α/β (°)
						不带挡货架 Shelves without barriers			带挡货架 Shelving with stops			门架全高(货叉落地) The full height of the mast (The fork touches the ground)			门架全高(货叉到顶) Full height of the mast (forks reaching the top) 不带挡货架 Shelves without barriers			带挡货架 Shelving with stops						
			3t	3.5t	3.8t	3t	3.5t	3.8t	3t	3.5t	3.8t	3t	3.5t	3.8t	3t	3.5t	3.8t	3t	3.5t	3.8t	3t	3.5t	3.8t	
二级基本型门架 Secondary basic type door frame	M200	2000	3000	3500	3800	155	160	160	155	160	160	1570	1620	1680	2741	2791	2831	3217	3217	3217	4050	4360	4595	6-12
	M250	2500	3000	3500	3800	155	160	160	155	160	160	1820	1870	1930	3241	3291	3331	3717	3717	3717	4100	4420	4655	6-12
	M300	3000	3000	3500	3800	155	160	160	155	160	160	2070	2120	2180	3741	3791	3831	4217	4217	4217	4150	4470	4705	6-12
	M330	3300	3000	3500	3800	155	160	160	155	160	160	2220	2270	2330	4041	4091	4131	4517	4517	4517	4170	4500	4735	6-12
	M350	3500	3000	3500	3800	155	160	160	155	160	160	2320	2370	2430	4241	4291	4331	4717	4717	4717	4190	4520	4755	6-12
	M370	3700	3000	3500	3800	155	160	160	155	160	160	2420	2470	2530	4441	4491	4531	4917	4917	4917	4210	4540	4775	6-12
	M400	4000	3000	3500	3800	155	160	160	155	160	160	2620	2670	2730	4741	4791	4831	5217	5217	5217	4290	4630	4865	6-12
	M425	4250	2900 *3000	3250 *3400	3650 *3800	155	160	160	155	160	160	2745	2795	2855	4991	5041	5081	5467	5467	5467	4320	4650	4885	6-6 *6-12
	M450	4500	2850 *3000	3100 *3350	3350 *3700	155	160	160	155	160	160	2870	2920	2980	5241	5291	5331	5717	5717	5717	4340	4680	4915	6-6 *6-12
	M500	5000	2550 *2850	2800 *2900	2850 *3200	155	160	160	155	160	160	3120	3170	3230	5741	5791	5831	6217	6217	6217	4390	4730	4965	6-6 *6-12
	M550	5500	2250 *2650	2350 *2700	2650 *3000	155	160	160	155	160	160	3420	3470	3530	6241	6291	6331	6717	6717	6717	4490	4840	5075	3-6 *3-6
	M600	6000	1550 *2200	1750 *2300	2200 *2800	155	160	160	155	160	160	3670	3720	3780	6741	6791	6831	7217	7217	7217	4530	4890	5125	3-6 *3-6
二级全自由门架 Second-level fully free mast	ZM200	2000	3000	3500	3800	864	869	889	388	443	503	1570	1620	1680	2735	2785	2825	3211	3211	3211	4070	4380	4615	6-12
	ZM250	2500	3000	3500	3800	1114	1119	1139	638	693	753	1820	1870	1930	3235	3285	3325	3711	3711	3711	4120	4430	4665	6-12
	ZM300	3000	3000	3500	3800	1364	1369	1389	888	943	1003	2070	2120	2180	3735	3785	3825	4211	4211	4211	4170	4490	4725	6-12
	ZM330	3300	3000	3500	3800	1514	1519	1539	1038	1093	1153	2220	2270	2330	4035	4085	4125	4511	4511	4511	4200	4520	4755	6-12
	ZM350	3500	3000	3500	3800	1614	1619	1639	1138	1193	1253	2320	2370	2430	4235	4285	4325	4711	4711	4711	4220	4540	4775	6-12
	ZM370	3700	3000	3500	3800	1714	1719	1739	1238	1293	1353	2420	2470	2530	4435	4485	4525	4911	4911	4911	4240	4560	4795	6-12
	ZM400	4000	3000	3500	3800	1914	1919	1939	1438	1493	1553	2620	2670	2730	4735	4785	4825	5211	5211	5211	4320	4640	4875	6-12
	ZM425	4250	2900 *3000	3250 *3400	3650 *3800	2039	2044	2064	1563	1618	1678	2745	2795	2855	4986	5036	5076	5462	5462	5462	4350	4670	4905	6-6 *6-12
	ZM450	4500	2850 *3000	3100 *3350	3350 *3700	2164	2169	2189	1688	1743	1803	2870	2920	2980	5235	5285	5325	5711	5711	5711	4370	4700	4935	6-6 *6-12
	ZM500	5000	2550 *2850	2800 *2900	2850 *3200	2414	2419	2439	1938	1993	2053	3120	3170	3230	5735	5785	5825	6211	6211	6211	4430	4760	4995	6-6 *6-12
	ZM550	5500	2250 *2650	2350 *2700	2650 *3000	2714	2719	2739	2238	2293	2353	3420	3470	3530	6235	6285	6325	6711	6711	6711	4530	4860	5095	6-6 *6-6
	ZM600	6000	1550 *2200	1750 *2300	2200 *2800	2964	2969	2989	2488	2543	2603	3670	3720	3780	6735	6785	6825	7211	7211	7211	4580	4910	5145	6-6 *6-6
三级全自由门架 Three-level fully free mast	ZSM360	3600	3000	3500	3800	1114	1119	1139	688	693	753	1870	1870	1930	4395	4395	4435	4821	4821	4821	4290	4580	4815	6-6
	ZSM400	4000	3000	3500	3800	1264	1269	1264	838	843	878	2020	2020	2055	4795	4795	4835	5221	5221	5221	4330	4620	4855	6-6
	ZSM435	4350	2850 *2950	3100 *3300	3300 *3700	1364	1369	1394	938	943	1008	2120	2120	2180	5145	5145	5185	5571	5571	5571	4360	4650	4885	6-6 *6-6
	ZSM450	4500	2800 *2900	3050 *3200	3250 *3600	1414	1419	1439	988	993	1053	2170	2170	2230	5295	5295	5335	5721	5721	5721	4370	4660	4895	6-6 *6-6
	ZSM470	4700	2750 *2850	3000 *3100	3050 *3350	1474	1479	1504	1048	1053	1118	2230	2230	2295	5495	5495	5535	5921	5921	5921	4390	4680	4915	6-6 *6-6
	ZSM480	4800	2700 *2800	2950 *3100	3000 *3300	1514	1519	1539	1088	1093	1153	2270	2270	2330	5595	5595	5635	6021	6021	6021	4400	4690	4925	6-6 *6-6
	ZSM500	5000	2600 *2750	2800 *2950	2800 *3200	1614	1619	1639	1188	1193	1253	2370	2370	2430	5795	5795	5835	6221	6221	6221	4430	4720	4955	6-6 *6-6
	ZSM540	5400	2300 *2700	2450 *2650	2450 *2900	1714	1719	1764	1288	1293	1378	2470	2470	2555	6195	6195	6235	6621	6621	6621	4460	4750	4985	3-6 *3-6
	ZSM600	6000	1500 *2100	1750 *2350	1750 *2600	1914	1919	1989	1488	1493	1603	2670	2670	2780	6795	6795	6835	7221	7221	7221	4560	4850	5085	3-6 *3-6
	ZSM650	6500	1000 *1800	1000 *1900	1050 *2300	2114	2119	2179	1688	1693	1793	2870	2870	2970	7295	7295	7335	7721	7721	7721	4620	4910	5165	3-3 *3-3
	ZSM700	7000	700 *1400	900 *1500	950 *2000	2289	2294	2449	1863	1868	2063	3045	3045	3240	7795	7795	7835	8221	8221	8221	4670	4960	5215	3-3 *3-3

注： *表示前轮为双胎的额定载重量。

订货代号示例 Example of oeder code：

